H2PRO TECH

CANYON D

Bunker system with dosing drum

Flexible, modular, robust, efficient - or simply put: many advantages

Three scopes - one machine: storage, conveying, dosing. Our bunker system with dosing drum CANYON D is very flexible, also in the effective use of space. Due to its modular design, according to the units construction principle, the storage capacity can be easily extended. This allows the system also to be easily integrated into existing plants.

Process-oriented storage is the first step towards efficient waste recycling. From here, the sorting and feed processing lines can be loaded individually and continually. Effective sorting also requires precise coordination: The walking floor in our bunker systems transports the material quickly and safely. The downstream dosing drum turns „piles of garbage" into constantly thick mats. As a result, the sorting plant can be optimally loaded via a conveyor belt. The consistent flow of material ensures effective throughput. Thus optimum conditions are given for a time- and cost-efficient processing!

CANYON D:
The modular, robust bunker system with drive and control, integrated walking floor system and a storage volume from 10 to 70 m³, optimum metering with slight material deterioration, low-maintenance and a throughput up to 200 m³/h.

Lagern. Fördern. Dosieren.
storage. conveying. dosing.

CANYON D
in Bestform.

Usage and feature

Our bunker system is based on a modular concept. The drive-module (1) contains the hydraulic and the drive unit for the walking floor, the control and the maintenance access. The storage volume can be extended as desired by adding further bunker-modules (2). The drum-module (3) connected downstream from the storage unit contains the dosing drum (4), which ensures a constant flow of material and throughput rates of up to 200 m³/h.

Field of applications: Waste paper, household waste, MSW, lightweight packaging, single-stream / commingled material, biodegradable waste, biomass and compost, commercial and industrial waste, RDF, wood chips and other free-flowing materials.

Functional principle: The input material is fed into the bunker by a wheel loader for example. The robust walking floor system conveys the material to the dosing drum. The carrier of the counterrotating dosing drum picks up the material and doses it to the following work process. If overload of the dosing drum occurs, the material feed to the dosing drum stops automatically and the material is transported backwards until the overload is removed.

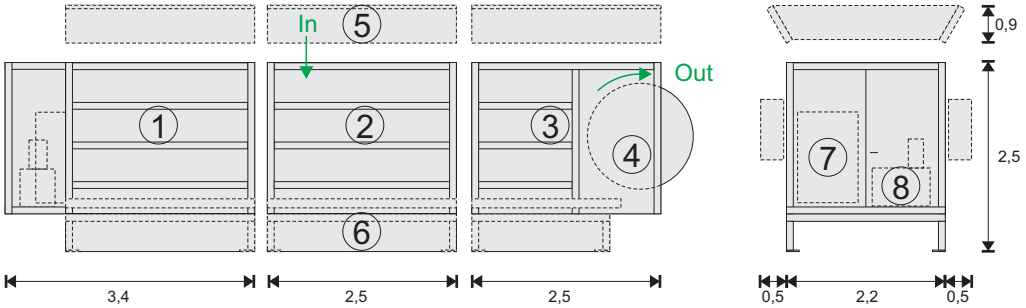

1: A-Module
2: B-Module
3: T-Module
4: Dosing drum
5: Top walls (Option)
6: Substructure
7: Control
8: Hydraulic power unit

Technical specification

Storage volume	10 - 70 m³
Throughput	Up to 200 m³/h*
Drive power for walking floor	7,5 - 11 kW
Drive power for dosing drum	7,5 - 22 kW
Dosing capacity	Adjustable, dosing drum is speed-controlled
Substructure	0,1 - 2,0 m
Loading sill height	2,5 - 4,5 m
Supplementary equipment	Top walls (overthrow protection), fill level monitoring (sensor-based)

* Throughput can vary depending on the material, material properties, moisture and composition. All values are approximate.

Scan vCard

H2PRO GmbH & Co. KG.
Hauptstraße 2
89441 Medlingen (Germany)
Tel. +499073-40398970
Fax. +499073-4039869
www.h2protech.de

Webseite