Bagopener

CANYON

B1

H2PRO

BAGOPENER MODULE

For an optimal and economical operation of a plant, an optimal and constant material feeding is mandatory. But these will be prevented by packing the waste in bags. Waste in bags is not sortable or recyclable. For this reason, opening and emptying of the bags is stringently required. Our Bag Opener CANYON B1 fulfills these demands 100 per cent.

The **H2PRO CANYON** series consist of a fully-modular construction and is available in two variants. The variant with an upstream bunker and a storage volume of up to 40 m³ is outstandingly applicable for using it as first machine in the process and for loading via wheel loader, excavator or crane.
The application within the process and thus integrated in the conveyor technology is realized by the variant CANYON B1 with feed hopper.

The **CANYON B1** combines machine and control system engineering in a compact and robust machine with maximum lifetime. The universally configurable bag opening unit is embedded in a robust frame. Equipped with powerful hydraulics and with cutting-edge control technology, the CANYON B1 can cope with all applications. Due to its individually adjustable program parameters and extensive diagnostic tools up to long-term recording of operating data, the machine offers more than any other bag opener on the market.

All known opening systems combine strengths and weaknesses. For one application they are well suited, for another application they are not suitable or only work with limitations. This condition was taken into account in the development of the **CANYON B1**. Hence we have developed a freely configurable opening system. For light applications or low throughput rates, a drum with hydraulically pretensioned combs on both sides is used which opens the bags in both directions of rotation. Automatic reversal of the direction of rotation reliably prevents long parts from being wrapped around.

For heaviest applications a Double-Segment-Drum with two drives and a drive power up to 45 kW is used. Close to the shredder concept, the machine can withstand even large impurities without damages. Hydraulically pretensioned combs are also used here and guarantee the best bag opening results even at heaviest applicatons.

Even for small bags from 2 l volume and the highests demands on the opening quality, we have got the right solution for you. This is where our Multi-Segment-Drum with one-sided, hydraulically pretensioned combs is used.

For economical operation, all drum and comb variants are available with welded or optionally exchangeable teeth and a special wear-resistant coating.

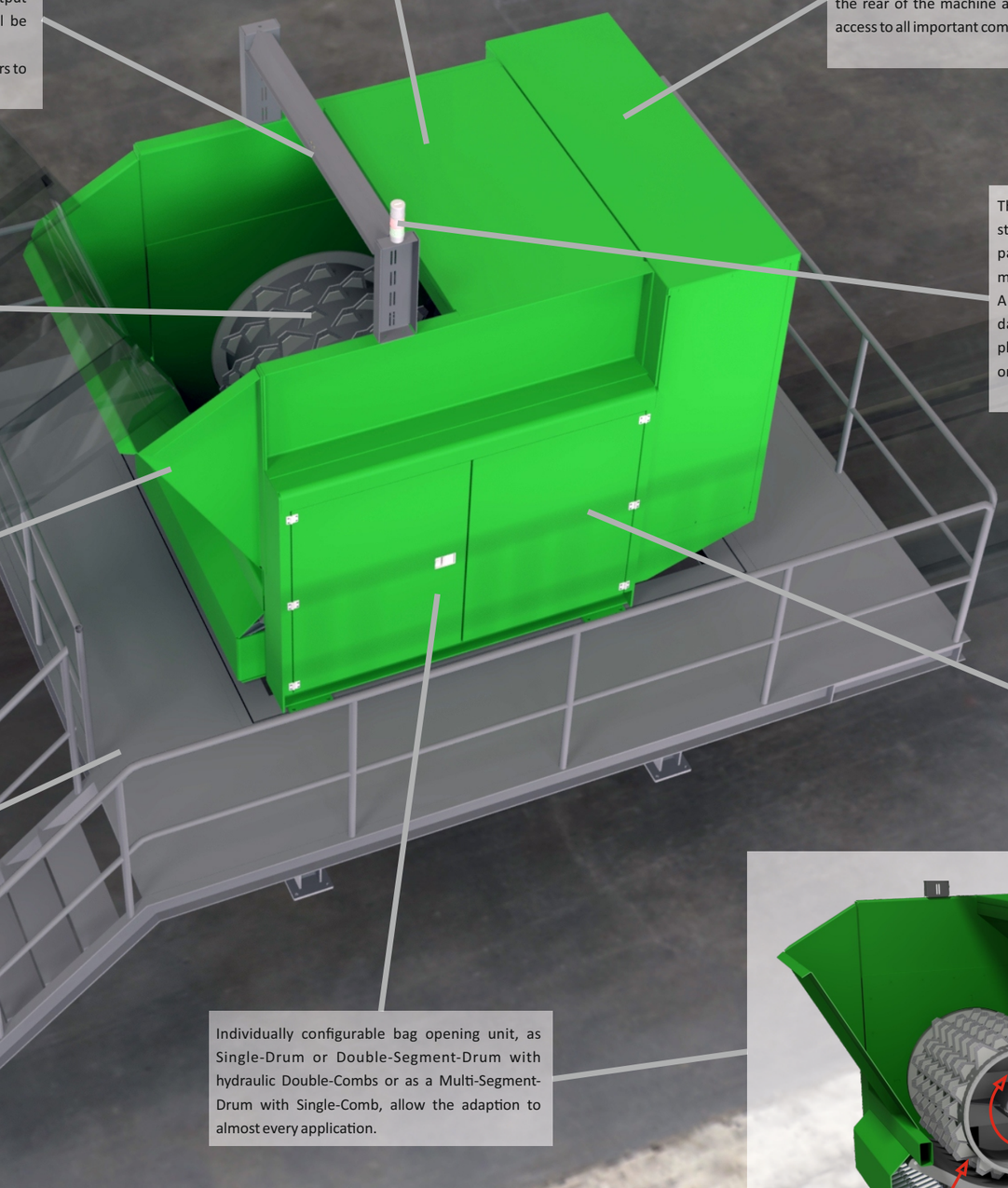

Filling level monitoring for demand-actuated feeding of the machine. Transmitted to the higher-level control system via control output or fieldbus, the release for feeding will be approved.
If the filling is sufficient, a message appears to stop the feeding.

The machine frame is designed as a robust welded construction. For long lifetimes, the machine consits of wear plates at the area of the material guide.

Acoustic enclosure with space for drum hydraulic and control cabinet. Large maintenance doors on the rear of the machine allow easy maintenance access to all important components.

The core part of the machine is the opening unit. Due to their modular construction an individual adaption to the application is possible.
Three drum variants with different teeth and drive powers are available. Wheter light packaging or household waste, an optimal configuration is always given.

The integrated signal light enables simple, optical status control of the machine. The operating parameters are comfortably entered on the machine display.
A comprehensive software application with database recording and a convenient smart-phone app is available for additional information on run times, status reports, evaluations, etc.

Feeding hopper for buffering the material. This ensures an uniform utilization and optimal dosing results after opening the bags.

Maintenance access on both sides for easy maintenance and service of the drive units and the bag opening unit.

A steel substructure with service walkway is available for a simple installation in existing or new plants. The height and the interfaces for the surrounding conveyor technology can be individually adjusted.

Individually configurable bag opening unit, as Single-Drum or Double-Segment-Drum with hydraulic Double-Combs or as a Multi-Segment-Drum with Single-Comb, allow the adaption to almost every application.

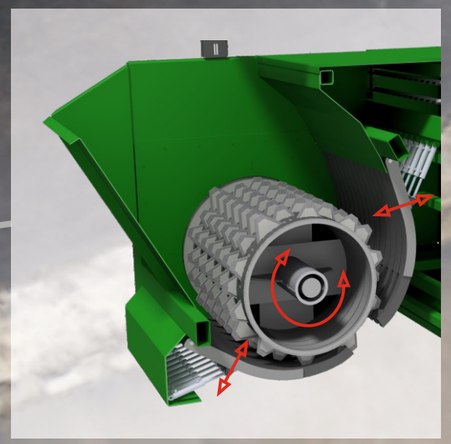

Technical data

CANYON B1

The material is loaded into the feeding hopper of the machine via an upstream conveyor belt. A sensor monitors the fill level. To control the feeding of the machine the fill level is reported to the higher-level control.
The bags are drawn in by the opening unit and opened and emptied between the teeth of the drum and the hydraulically pretensioned combs.
The material mixture drops out under the machine and falls to the arranged conveyor belt below.
Impurities are drawn in and pressed against the combs by the rotary movement of the drum. If the preload force is exceeded, one or more segments open. The impurities can escape and the combs go back to the starting position.

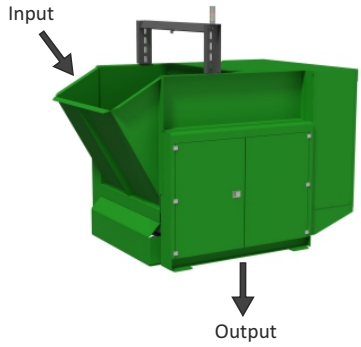

CANYON	B1
Variants	A / B / C
Throughput (m^3/h)	up to 250*
Throughput (t/h)	up to 60*
Useful width (m)	1.7
Drum variants	Single drum (A) / Double-Segment-Drum (B) / Multi-Segment-Drum (C)
Teeth	Standard: welded, optional: screwed, interchangeable segment
Drive	Electro-Hydraulic
Drivepower (kW)	15 - 45
Revolution (1/min)	5 - 35
Control cabinet (Control)	Control cabinet with PLC control included in basic machine
Fieldbus	Option: Profibus, EtherCAT, ModBus, CanOpen
Diagnostic and operating data logging	Option: Database record, Web-App, Smartphone-App
Teeth variants	Standard: HB400, optional: tungsten carbide coating
Fill level monitoring	Included in basic machine
Steel substructure	Optional

* Throughput can vary depending on the material, material properties, moisture and composition. All values are approximate.
●: Included; ○: Optional Accessories
All values are approximate. Technical modifications reserved.

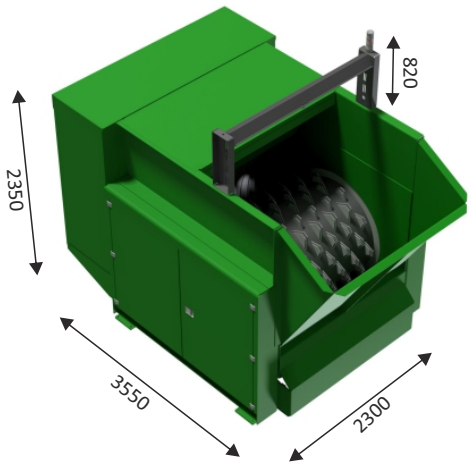

H2PRO

H2Pro GmbH & Co. KG
Hauptstraße 2
89441 Medlingen
Deutschland

H2Pro GmbH & Co. KG
Gartnerstraße 20
89423 Gundelfingen
Deutschland

Telefon: +49 9073 40398970
Fax: +49 9073 4039869
h2protech.de
kontakt@h2protech.de